FOREWORD

This manual covers the service procedures of the TOYOTA FORKLIFT 6FG/6FD10 – 30. Please use this manual for providing quick, correct servicing of the corresponding forklift models.

This manual deals with the above models as of January 1994. Please understand that disagreement can take place between the descriptions in the manual and actual vehicles due to change in design and specifications. Any change or modifications thereafter will be informed by Toyota Industrial Equipment Parts & Service News.

For the service procedures of the mounted engine, read the repair manuals listed below as reference together with this manual.

(Reference)

Repair manuals related to this manual are as follows:

TOYOTA INDUSTRIAL EQUIPMENT 5K ENGINE
REPAIR MANUAL (No.CE617)

TOYOTA INDUSTRIAL EQUIPMENT 4Y ENGINE
REPAIR MANUAL (No.CE602)

TOYOTA INDUSTRIAL EQUIPMENT 1DZ ENGINE
REPAIR MANUAL (No.CE618)

TOYOTA INDUSTRIAL EQUIPMENT 2Z ENGINE
REPAIR MANUAL (No.CE625)

TOYOTA MOTOR CORPORATION

SECTION INDEX

GENERAL

EXTERIOR VIEWS

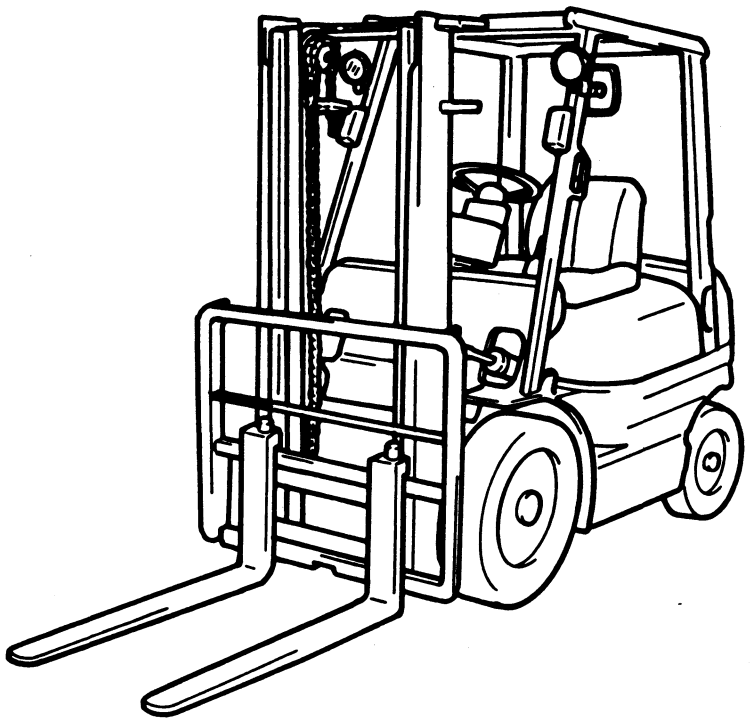

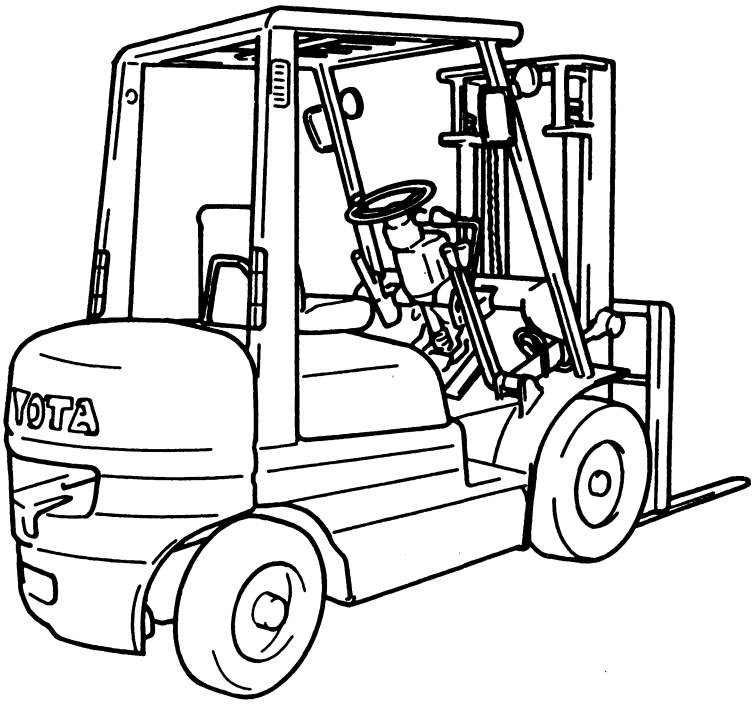

VEHICLE MODEL

Series	Load capacity	Model	Engine model	Engine type	Drive system
1 ton series	1.0 ton	6FG10	5K	Gasoline	Clutch
		02-6FG10		↑	Torque converter
		40-6FG10	4Y	↑	Clutch
		42-6FG10		↑	Torque converter
		6FD10	1DZ	Diesel	Clutch
		02-6FD10		↑	Torque converter
	1.35 ton	6FG14	5K	Gasoline	Clutch
		02-6FG14		↑	Torque converter
		40-6FG14	4Y	↑	Clutch
		40-6FG14		↑	Torque converter
		6FD14	1DZ	Diesel	Clutch
		02-6FD14		↑	Torque converter
	1.5 ton	6FG15	5K	Gasoline	Clutch
		02-6FG15		↑	Torque converter
		40-6FG15	4Y	↑	Clutch
		42-6FG15		↑	Torque converter
		6FD15	1DZ	Diesel	Clutch
		02-6FD15		↑	Torque converter
	1.75 ton	6FG18	5K	Gasoline	Clutch
		02-6FG18		↑	Torque converter
		40-6FG18	4Y	↑	Clutch
		42-6FG18		↑	Torque converter
		6FD18	1DZ	Diesel	Clutch
		02-6FD18		↑	Torque converter
2 ton series	2.0 ton	6FG20	5K	Gasoline	Clutch
		02-6FG20		↑	Torque converter
		40-6FG20	4Y	↑	Clutch
		42-6FG20		↑	Torque converter
		60-6FD20	1DZ	Diesel	Clutch
		62-6FD20		↑	Torque converter

Series	Load capacity	Model	Engine model	Engine type	Drive system
2 ton series	2.0 ton	6FD20	2Z	Diesel	Clutch
		02-6FD20		↑	Torque converter
	2.25 ton	6FG23	5K	Gasoline	Clutch
		02-6FG23		↑	Torque converter
		40-6FG23	4Y	Gasoline	Clutch
		42-6FG23		↑	Torque converter
		60-6FD23	1DZ	Diesel	Clutch
		62-6FD23		↑	Torque converter
		6FD23	2Z	↑	Clutch
		02-6FD23		↑	Torque converter
	2.5 ton	6FG25	5K	Gasoline	Clutch
		02-6FG25		↑	Torque converter
		40-6FG25	4Y	↑	Clutch
		42-6FG25		↑	Torque converter
		60-6FD25	1DZ	Diesel	Clutch
		62-6FD25		↑	Torque converter
		6FD25	2Z	↑	Clutch
		02-6FD25		↑	Torque converter
3 ton series	2.75 ton	6FG28	4Y	Gasoline	Clutch
		02-6FG28		↑	Torque converter
		60-6FD28	1DZ	Diesel	Clutch
		62-6FD28		↑	Torque converter
		6FD28	2Z	↑	Clutch
		02-6FD28		↑	Torque converter
	3.0 ton	6FG30	4Y	Gasoline	Clutch
		02-6FG30		↑	Torque converter
		60-6FD30	1DZ	Diesel	Clutch
		62-6FD30		↑	Torque converter
		6FD30	2Z	↑	Clutch
		02-6FD30		↑	Torque converter

South Africa

Series	Load capacity	Model	Engine model	Engine type	Drive system
1 ton series	1.5 ton	02-6FGA15	5K	Gasoline	Torque converter
		02-6FDA15	7DZ	Diesel	↑
	1.75 ton	02-6FGA18	5K	Gasoline	↑
		02-6FDA18	1DZ	Diesel	↑
2 ton series	2.0 ton	42-6FGA20	4Y	Gasoline	↑
		02-6FDA20	2Z	Diesel	↑
		62-6FDA20	1DZ	↑	↑
	2.5 ton	42-6FGA25	4Y	Gasoline	↑
		02-6FDA25	2Z	Diesel	↑
		62-6FDA25	1DZ	↑	↑
3 ton series	3.0 ton	02-6FGA30	4Y	Gasoline	↑
		02-6FDA30	2Z	Diesel	↑
		62-6FDA30	1DZ	↑	↑

Indonesia

Series	Load capacity	Model	Engine model	Engine type	Drive system
2 ton series	2.0 ton	6FDN20	2Z	Diesel	Clutch
		60-6FDN20	1DZ	↑	↑
	2.5 ton	6FDN25	2Z	↑	↑
		60-6FDN25	1DZ	↑	↑
3 ton series	3.0 ton	6FDN30	2Z	↑	↑
		60-6FDN30	1DZ	↑	↑

FRAME NUMBER

Frame No. Punching Position

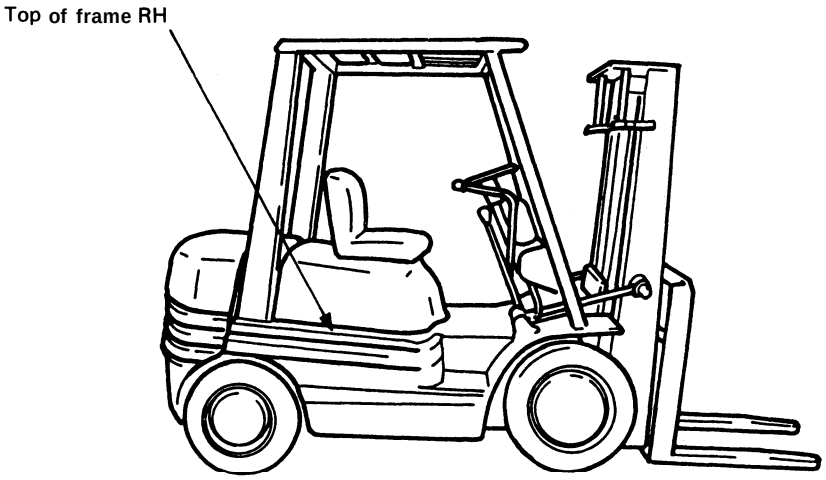

	Engine	Model	Punching format
1 ton series	5K	6FG10	6FG18-10001
		02-6FG10	
		6FG14	
		02-6FG14	
		6FG15	
		02-6FG15	
		6FG18	
		02-6FG18	
	4Y	40-6FG10	406FG18-10001
		42-6FG10	
		40-6FG14	
		42-6FG14	
		40-6FG15	
		42-6FG15	
		40-6FG18	
		42-6FG18	
	1DZ	6FD10	6FD18-10001
		02-6FD10	
		6FD14	
		02-6FD14	
		6FD15	

	Engine	Model	Punching format
1 ton series	1DZ	02-6FD15	6FD18-10001
		6FD18	
		02-6FD18	
2 ton series	5K	6FG20	6FG25-10001
		02-6FG20	
		6FG23	
		02-6FG23	
		6FG25	
		02-6FG25	
	4Y	40-6FG20	406FG25-10001
		42-6FG20	
		40-6FG23	
		42-6FG23	
		40-6FG25	
		42-6FG25	
	2Z	6FD20	6FD25-10001
		02-6FD20	
		6FD23	
		02-6FD23	
		6FD25	
		02-6FD25	
	1DZ	60-6FD20	606FD25-10001
		62-6FD20	
		60-6FD23	
		62-6FD23	
		60-6FD25	
		62-6FD25	
3 ton series	4Y	6FG28	6FG30-10001
		02-6FG28	
		6FG30	
		02-6FG30	
	1DZ	60-6FD28	606FD30-10001
		62-6FD28	
		60-6FD30	
		62-6FD30	
	2Z	6FD28	6FD30-10001
		02-6FD28	
		6FD30	
		02-6FD30	

South Africa

	Engine	Model	Punching format
1 ton series	5K	02-6FGA15	6FGA18-10001
		02-6FGA18	
	1DZ	02-6FDA15	6FDA18-10001
		02-6FDA18	
2 ton series	4Y	42-6FGA20	406FGA25-10001
		42-6FGA25	
	2Z	02-6FDA20	6FDA25-10001
		02-6FDA25	
	1DZ	62-6FDA20	606FDA25-10001
		62-6FDA25	
3 ton series	4Y	02-6FGA30	6FGA30-10001
	2Z	02-6FDA30	6FDA30-10001
	1DZ	62-6FDA30	606FDA30-10001

Indonesia

	Engine	Model	Punching format
2 ton series	2Z	6FDN20	6FDN25-10001
		6FDN25	
	1DZ	60-6FDN20	606FDN25-10001
		60-6FDN25	
3 ton series	2Z	6FDN30	6FDN30-10001
	1DZ	60-6FDN30	606FDN30-10001

HOW TO READ THIS MANUAL

EXPLANATION METHOD

1. Operation procedure
   (1) The operation procedure is described in either pattern A or pattern B below.
   Pattern A: Explanation of each operation step with a photo or illustration.
   Pattern B: Explanation of operation procedure by indicating step numbers in one illustration, followed by explanation of cautions and notes summarized as point operations.

Example of description in pattern B

DISASSEMBLY·INSPECTION·REASSEMBLY Tightening torque unit T = N·m (kg-cm) [ft-lb]

If a place or part cannot be indicated directly, the part name is described on the either side of the illustration.

Example: 1 Piping

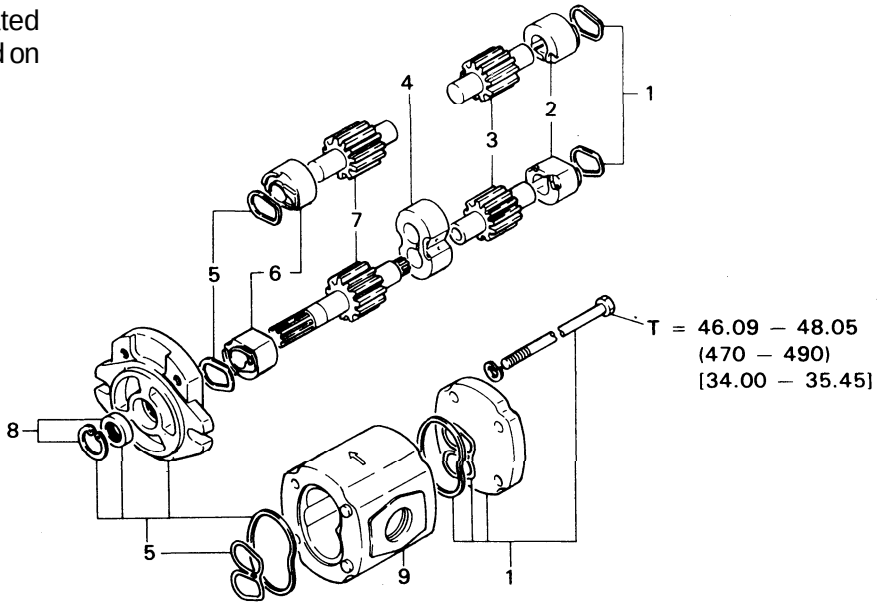

Disassembly Procedure

1 Remove the cover. **[Point 11**

2 Remove the bush **[Point 2]** ← Operation explained later

3 Remove the gear.

Point operations Explanation of key point for operation with an illustration

[Point 1]
Disassembly: Put a match mark when removing the pump cover

[Point 2]
Inspection: Measure the bush inside diameter.
Bush inside diameter limit: 19.12 mm (0.7528 in)

2. How to read components figures

(1) The components figure uses the illustration in the parts catalog for the vehicle model. Please refer to the catalog for checking the part name.
The number at the right shoulder of each components figure indicates the Fig. number in the parts catalog.

(Example)

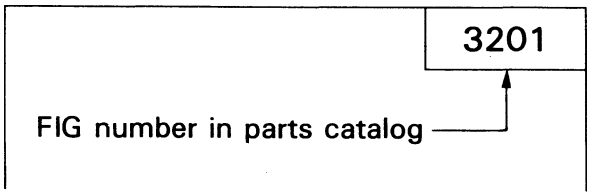

3. Matters omitted in this manual

(1) This manual omits description of the following jobs, but perform them in actual operation:
① Cleaning and washing of removed parts as required
② Visual inspection (partially described)

TERMINOLOGY

Caution:
Important matters of which negligence may cause accidents. Be sure to observe them.

Note:
important items of which negligence may cause accidents, or matters in operation procedure requiring special attention.

Standard: Values showing allowable range in inspection and adjustment.
Limit: Maximum or minimum allowable value in inspection or adjustment.

ABBREVIATIONS

Abbreviation (code)	Meaning	Abbreviation (code)	Meaning
ASSY	Assembly	SST	Special service tool
LH	Left hand	STD	Standard
LLC	Long life coolant	T =	Tightening torque
OPT	Option	○ ○ T	Number of teeth (○ ○)
O/S	Oversize	U/S	Undersize
PS	Power steering	W/	With
RH	Right hand	L/	Less
SAE	Society of Automotive Engineers (USA)		

OPERATIONAL TIPS

1. Safe operation
   (1) After jacking up, always support with rigid stands.
   (2) When hoisting the vehicle or its heavy component, use wire repe(s) with a sufficient reserve in load capacity.
   (3) Always disconnect the battery plugs before the inspection or servicing of electrical parts.

2. Tactful operation
   (1) Prepare the mechanic tools, necessary measuring instruments (circuit tester, megger, oil pressure gauge, etc.) and SSTs before starting operation.
   (2) Before disconnecting wiring, always check the cable color and wiring state.
   (3) When overhauling functional parts, complicated portions or related mechanisms, arrange the parts neatly to prevent confusion.
   (4) When disassembling and inspecting such a precision part as the control valve, use clean tools and operate in a clean location.
   (5) Follow the described procedures for disassembly, inspection and reassembly.
   (6) Replace, gaskets, packings and O-rings with new ones each time they are disassembled.
   (7) Use genuine Toyota parts for replacement.
   (8) Use specified bolts and nuts. Observe the specified tightening torque at the time of reassembly. If no tightening torque is specified, tighten the bolt or nut according to the standard tightening torque table.

3. Grasping the trouble state
   When a trouble occurs, do not attempt immediate disassembly or replacement but first check if the trouble requires disassembly or replacement for remedying.

4. Method for battery connection upon occurrence of run-down batteries on 24-V specification vehicle with 2Z engine (with 12/24 V voltage switching system)

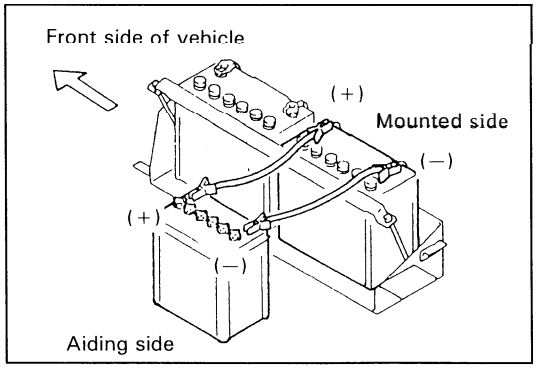

(1) Connect a 12-V aiding battery to the one on the rear side of the two mounted batteries.

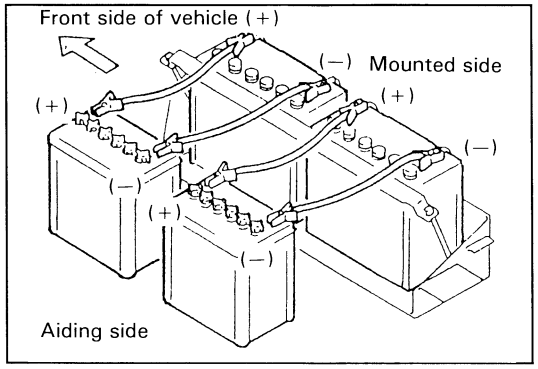

(2) If starting falls with one aiding battery, connect another aiding battery to the front side one of the mounted batteries.

Caution:
- As batteries are shorted when the negative (−) terminal of the aiding battery on the front side of the vehicle is connected to the body ground, connect the booster cables to the vehicle side to each corresponding terminal.
- Never connect between aiding batteries.

(3) When the batteries are required to charge by the charger, remove the battery from the vehicle to charge the battery.

STANDARD BOLT & NUT TIGHTENING TORQUE

Standard bolt and tightening torques are not indicated.
Judge the standard tightening torque as shown below.

1. Find out the type of the bolt from the list below and then find the bolt tightening torque from the table.
2. The nut tightening torque can be judged from the mating bolt type.

BOLT STRENGTH TYPE IDENTIFICATION METHOD

1. Identification by bolt shape

	Shape and class		Class
Hexagon head bolt	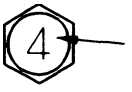	Bolt head No.	4 = 4T 5 = 5T 6 = 6T 7 = 7T
		No mark	4T
Hexagon flange bolt	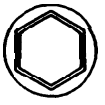	No mark	4T
Hexagon head bolt		Two protruding lines	5T
Hexagon flange bolt		Two protruding lines	6T
Hexagon head bolt		Three protruding lines	7T
Welded bolt	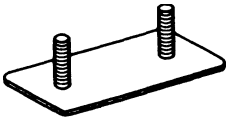		4T
Stud bolt	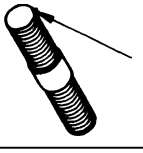	No mark	4T
	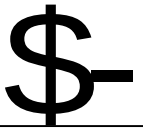	Grooved	6T

2. Identification by part No.

Hexagon head bolt

Parts No.
91611-40625

Length (mm)
Diameter (mm)
Class

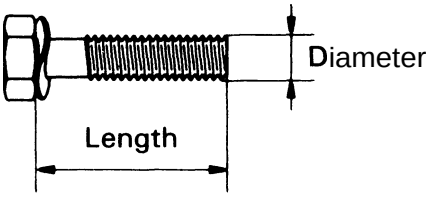

Stud bolt

Part No.
92132-40614

Length (mm)
Diameter (mm)
Class

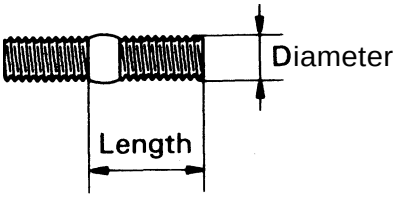

TIGHTENING TORQUE TABLE

Class	Diameter mm	Pitch mm	Specified torque					
			Hexagon head bolt 			Hexagon flange bolt 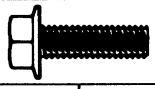		
			N·m	kg-cm	ft-lb	N·m	kg-cm	ft-lb
4T	6	1.0	5.4	55	48 in.-lb	5.9	60	52 in.-lb
	8	1.25	13	130	9	14	145	10
	10	1.25	25	260	19	28	290	21
	12	1.25	47	480	35	53	540	39
	14	1.5	75	760	55	83	850	61
	16	1.5	113	1150	83	—	—	—
5T	6	1.0	6.4	65	56 in.-lb	—	—	—
	8	1.25	16	160	12			
	10	1.25	32	330	24			
	12	1.25	59	600	43			
	14	1.5	91	930	67			
	16	1.5	137	1400	101			
6T	6	1.0	7.8	80	69 in.-lb	8.8	90	78 in.-lb
	8	1.25	19	195	14	21	215	16
	10	1.25	39	400	29	43	440	32
	12	1.25	72	730	53	79	810	59
	14	1.5	—	—	—	123	1250	90
7T	5	1.0	11	110	8	12	120	9
	8	1.25	25	260	19	28	290	21
	10	1.25	52	530	38	58	590	43
	12	1.25	95	970	70	103	1050	76
	14	1.5	147	1500	108	167	1700	123
	16	1.5	226	2300	166	—	—	—

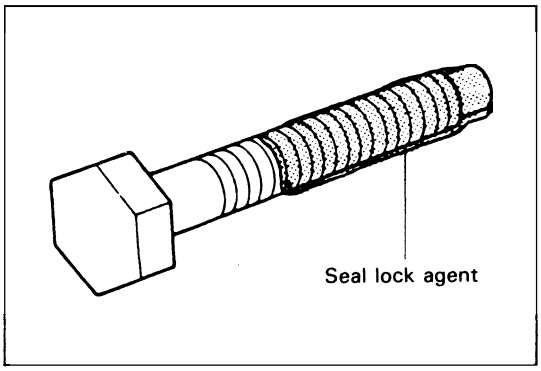

PRECOAT BOLTS

(Bolts with seal lock agent coating on threads)

1. Do not use the precoat bolt as it is in either of the following cases:
   (a) After it is removed.
   (b) When the precoat bolt is moved (loosened or tightened) by tightness check, etc.

Note:
For torque check, use the lower limit of the allowable tightening torque range. If the bolt moves, retighten it according to the steps below.

2. Method for reuse of precoat bolts
   (1) Wash the bolt and threaded hole. (The threaded hole must be washed even for replacement of the bolt.)
   (2) Parfectly dry the washed parts by air blowing.
   (3) Coat the specified seal lock agent to the threaded portion of the bolt.

HIGH PRESSURE HOSE FITTING TIGHTENING TORQUE

1. When connecting a high pressure hose, wipe the hose fitting and mating nipple contact surfaces with clean cloth to remove foreign matters and dirt. Also check no dent or other damage on the contact surfaces before installation.

2. When connecting a high pressure hose, hold the hose to align the fitting with the nipple and tighten the fitting.

3. The maximum tightening torque must not exceed twice the standard tightening torque.

Nominal diameter of screw	Standard tightening torque N·m (kg-cm) [ft-lb]		Hose inside diameter mm (in)
	Standard	Tightening range	
7/16 — 20UNF	25 (250) [18.11	24 - 26 (240 - 270) [17.4 ~ 19.51	6 (0.24)
9/16 — 18UNF	49 (500)[36.2]	47 - 52 (480 - 530) [34.7 ~ 38.31	9 (0.35)
314 — 16UNF	59 (600) [43.4]	56 - 62 (570 ~ 630) 141.2 ~ 45.61	12 (0.47)
718 — 14UNF	59 (600) 143.41	56 ~ 62 (570 ~ 630) 141.2 ~ 45.61	12 (0.47)
718 — 14UNF	78 (800) 157.91	74 - 82 (760 ~ 840) 155.0 ~ 60.81	15 (0.59)
1·1/16 — 12UNF	118 (1200)[86.8]	112 - 123 (1140 - 1250) [82.5 - 90.41	19 (0.75)
1·5/16 — 12UNF	137 (1400)[101.3]	130 - 144 (1330 ~ 1470) t96.2 ~ 106.41	25 (0.98)
PF1/4	25 (250) [18.1]	24 - 26 (240 - 270) [17.4 ~ 19.51	6 (0.24)
PF3/8	49 (500) [36.2]	47 - 52 (480 ~ 530) 134.7 ~ 38.31	9 (0.35)
PF1/2	59 (600) 143.41	56 - 62 (570 - 630) 141.2 ~ 45.61	12 (0.47)
PF3/4	118 (1200) [86.8]	112 ~ 123 (1140 - 1250) [82.5 - 90.41	19 (0.75)
PF1	137 (1400)[101.3]	130 - 144 (1330 - 1470) [96.2 ~ 106.41	25 (0.98)

WIRE ROPE SUSPENSION ANGLE LIST

Lifting angle	Tension	Compres-sion	Suspension method	Lifting angle	Tension	Compres-sion	Suspension method
0°	1.00 time	0 time	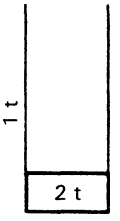	90°	1.41 time	1.00 time	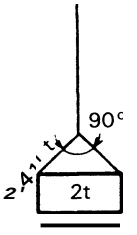
30°	1.04 time	0.27 time	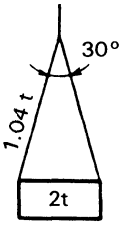	120°	2.00 time	1.73 time	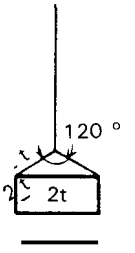
60°	1.16 time	0.58 time	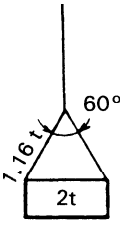				

SAFE LOAD FOR EACH WIRE ROPE SUSPENSION ANGLE

Unit: N (ton) [lb]

Rope diameter	Cutting load	Single-rope suspension	Two-rope suspension				Four-rope suspension			
		0°	0°	30°	60°	90°	0°	30°	60°	90°
6 mm (0.24 in)	21380 (2.18) [4807]	3040 (0.31) [683.6]	6080 (0.62) [1367]	5880 (0.6) [13231	5200 (0.53) [1169]	4310 (0.44) [970]	12160 (1.24) [2734]	11770 (1.2) [2646]	10400 (1.06) [2337]	8630 (0.88) [1940]
8 mm (0.32 in)	31480 (3.21) [7078]	4410 (0.45) [992.3]	8830 (0.9) [19851	8530 (0.87) [19181	7650 (0.78) [17201	6280 (0.64) 11411]	17650 (1.8) 139691	17060 (1.74) [3937]	15300 (1.56) 134401	12550 (1.28) [2322]
10 mm (0.4 in)	49230 (5.02) [11069]	6960 (0.71) [1565.61	14020 (1.43) [3153]	13440 (1.37) [3021]	11770 (1.2) [2646]	9810 (1.0) [2205]	27460 (2.8) [6174]	26480 (2.7) [5954]	23540 (2.4) [5292]	'19610 (2.0) [4410]
12.5 mm (0.5 in)	76880 (7.84) [173871	10980 (1.12) [2469.5]	21570 (2.2) [4851]	21280 (2.1) [4631]	18630 (1.9) [4190]	14710 (1.5) [3308]	43150 (4.4) 197021	41190 (4.2) 19261]	37270 (3.8) I83791	29420 (3.0) [6615]
14 mm (0.56 in)	96400 (9.83) [21675]	13730 (1.4) [3087]	27460 (2.8) 161741	26480 (2.7) 159541	23540 (2.4) 152921	18630 (1.9) 141901	54920 (5.6) 1123481	52960 (5.4) [119071	47070 (4.8) [105841	37270 (3.8) [8379]

COMPONENTS WEIGHT

Unit: kg (lb)

Component		Weight (mass)
Engine	5K	97 (214)
	4Y	134 (295)
	1DZ	176 (388)
	2Z	240 (529)
Transmission		78 (172)
Torque converter	For 1 speed	152 (335)
	For 2 speeds	163 (359)
Balance weight	1.0 ton model	Approx. 460 (1014)
	1.35 ton model	Approx. 710 (1566)
	1.5 ton model	Approx. 845 (1863)
	1.75 ton model	Approx. 985 (2172)
	2.0 ton model	Approx. 1220 (2690)
	2.25 ton model	Approx. 1415 (3120)
	2.5 ton model	Approx. 1555 (3429)
	2.75 ton model	Approx. 1720 (3793)
	3.0 ton model	Approx. 1920 (4234)
V mast ASSY W/lift bracket (with lift cylinder, without fork, max. lifting height: 3000 mm (118 in))	1.0 – 1.75 ton model	Approx. 410 (904)
	2.0 ton model	Approx. 460 (1014)
	2.25.2.5 ton model	Approx. 500 (1103)
	2.75·3.0 ton model	Approx. 570 (1257)
V mast ASSY L/lift bracket and fork (with lift cylinder max. lifting height: 3000 mm (118 in))	1.0 – 1.75 ton model	Approx. 340 (750)
	2.0 ton model	Approx. 370 (816)
	2.25.2.5 ton model	Approx. 400 (882)
	2.75.3.0 ton model	Approx. 445 (981)

RECOMMENDED LUBRICANT QUANTITY & TYPES

Description		Classification	Type	Application	Quantity
Engine	Gasoline	API SD, SE	Motor oil SAE30 (SAE20 in cold area) SAE20W-40 (SAE1OW-30 in cold area)	5K	4.0 1 (1.06 US gal)
				4Y	4.0 1 (1.06 US gal)
	Diesel	API CC, CD or better	Diesel engine oil SAE30 (SAE20 in cold area) SAE1OW-30	1DZ	7.9 1 (2.09 US gal)
				2Z	9.0 1 (2.38 US gal)
Transmission		API GL-4 GL-5	Hypoid gear oil SAE85W-90	Clutch models	4.0 ℓ (1.06 US gal)
Torque converter		ATF	GM Dexron® II	Torque converter models	14.0 1 (3.70 US gal)
Differential		API GL-4 GL-5	Hypoid gear oil SAE85W-90	1 ton series 2 ton series 3 ton series	5.4 ℓ (1.43 US gal) 6.4 ℓ (1.69 US gal) 9.0 ℓ (2.38 US gal)
Hydraulic oil [Max. fork height = 3000 mm (118 in)]		ISO VG32	Hydraulic oil	Attached Table 2 Hydraulic oil volume	
Fuel tank				1 ton series 2 ton series 3 ton series	45 1 (11.9 US gal) 65 ℓ (17.2 US gal) 65 1 (17.2 US gal)
Brake and clutch line			SAE J-1703 DOT-3	All models	Proper quantity Reservoir Tank 0.2 ℓ (0.05 US gal)
Chassis parts			MP grease	All models	Proper quantity
Coolant (excluding reservoir tank)		LLC	• LLC 30-50% mixture (for winter or all-season) • Coolant with rust-inhibitor (for spring, summer and autumn)	Attached Table 1 Coolant volume	
Coolant (Reservoir Tank)		↑	↑	All models	1.1 ℓ (0.29 US gal) (at Full level)

Attached Table ▮ Coolant volume Unit: *1* (US gal)

Engine	Drive method	1 ton series	2 ton series	3 ton series
5K	Clutch models	7.1 (1.87)	7.2 (1.90)	
	Torque converter models	7.6 (2.01)	7.3 (1.93)	
4Y	Clutch models	9.1 (2.40)	9.2 (2.43)	10.0 (2.64)
	Torque converter models	9.6 (2.53)	9.3 (2.46)	9.6 (2.53)
1DZ	Clutch models	7.8 (2.06)	8.6 (2.27)	8.7 (2.30)
	Torque converter models	8.1 (2.14)	8.3 (2.19)	8.3 (2.19)
2Z	Clutch models		8.9 (2.35)	9.3 (2.46)
	Torque converter models		9.0 (2.38)	8.9 (2.35)

Attached Table 2 Hydraulic oil volume Unit: *1* (US gal)

Model	1 ton series	2 ton series	3 ton series
5K engine models	27 (7.1)	34 (9.0)	
4Y engine models	27 (7.1)	34 (9.0)	37 (9.8)
1DZ engine models	27 (7.1)	34 (9.0)	37 (9.8)
2Z engine models		39 (10.3)	42 (11.1)

LUBRICATION CHART

Clutch Model

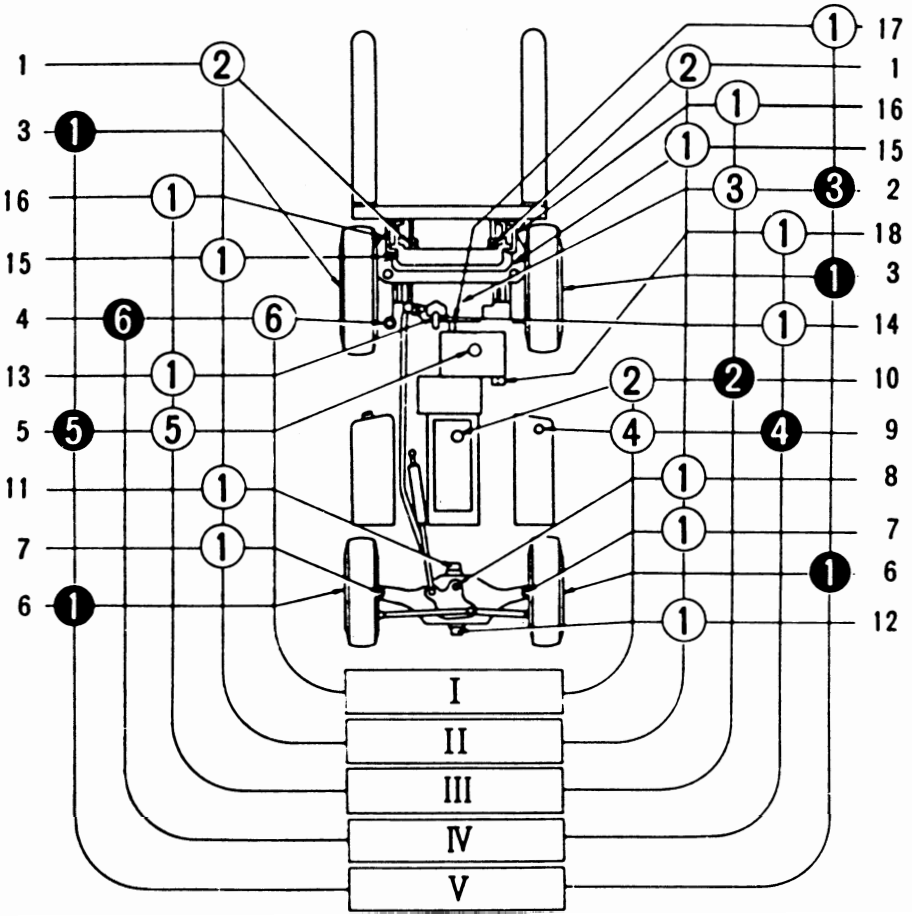

○ Inspection
● Replacement
① MP grease
② Engine oil
③ Hypoid gear oil
④ Hydraulic oil
⑤ Hypoid gear oil
⑥ Brake fluid

I. Inspect every 8 hours (daily)
II. Inspect every 40 hours (weekly)
III. Inspect every 170 hours (monthly)
IV. Inspect every 1000 hours (6 monthly)
V. Inspect every 2000 hours (annually)

1 Chain
2 Differential
3 Front wheel bearing
4 Brake and clutch master cylinder
5 Transmission case
6 Rear wheel bearing
7 Steering knuckle king pin
8 Bell crank pin
9 Oil tank
10 Engine crank case
11 Rear axle beam front
12 Rear axle beam rear
13 Tilt steering universal joint
14 Tilt steering locking mechanism
15 Mast support bushing
16 Tilt cylinder front pin
17 Propeller shaft
18 Gear shift link

Torque Converter Model

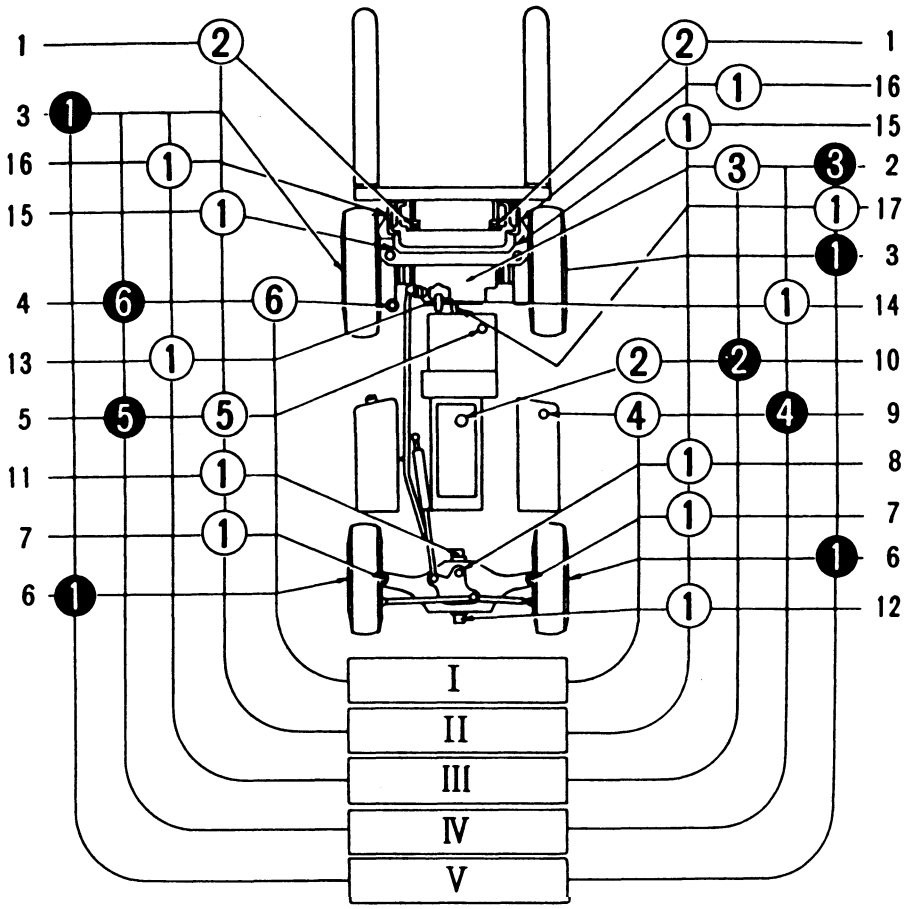

3 Inspection
Replacement
① MP grease
② Engine oil
③ Hypoid gear oil
4 Hydraulic oil
⑤ Automatic transmission fluid
⑥ Brake fluid

I. Inspect every 8 hours (daily)
II. Inspect every 40 hours (weekly)
III. Inspect every 170 hours (monthly)
IV. Inspect every 1000 hours (6monthly)
V. Inspect every 2000 hours (annually)

1 Chain
2 Differential
3 Front wheel bearing
4 Brake master cylinder
5 Torque converter case
6 Rear wheel bearing
7 Steering knuckle king pin
8 Bell crank pin
9 Oil tank
10 Engine crank case
11 Rear axle beam front
12 Rear axle beam rear
13 Tilt steering universal joint
14 Tilt steering locking mechanism
15 Mast support bushing
16 Tilt cylinder front pin
17 Propeller shaft

PERIODIC MAINTENANCE

INSPECTION METHOD

I : Inspection. Repair or replacement if required.
M : Measurement. Repair or adjustment if required.
T : Retightening C : Cleaning L : Lubrication
* : For new vehicle *1 : Flaw detector

Item	Inspection Period	Every 1 month	Every 3 months	Every 6 months	Every 12 months
		Every 170 hours	Every 500 hours	Every 1000 hours	Every 2000 hours
ENGINE					
Main body	Proper starting and abnormal noise	I	←	←	←
	Rotating condition at idling	M	←	←	←
	Rotating condition during acceleration	M	←	←	←
	Exhaust gas condition	I	←	←	←
	Air cleaner element	C	←	←	←
	Valve clearance				M
	Compression				M
	Cylinder head bolt loosening				T
	Muffler rubber mount				I
PCV system	Clogging and damage in PCV valve and piping	I	←	←	←
Governor	No-load maximum rpm	M	←	←	←
Lubrication system	Oil leak	I	←	←	←
	Oil level	I	←	←	←
	Clogging and dirt of oil filter	I	←	←	←
Fuel system	Fuel leak	I	←	←	←
	Operation of carburetor link mechanism	I	←	←	←
	Dirt and clogging of fuel filter and element	I	←	←	←
	Injection timing			M	←
	Injection nozzle injection pressure and spray status				M
	Draining of sedimenter			I	←
Cooling system	Coolant level in radiator and leak	I	←	←	←
	Rubber hose degradation	I	←	←	←
	Radiator cap condition	I	←	←	←
	Fan belt tension, looseness and damage	I	←	←	←
	Radiator rubber mount				I

Item	Inspection Period	Every 1 month Every 170 hours	Every 3 months Every 500 hours	Every 6 months Every 1000 hours	Every 12 months Every 2000 hours
POWER TRANSMISSION SYSTEM					
Clutch	Clutch pedal play	M	←	←	←
	Abnormal sound and functioning (connection)	I	←	←	←
	Clutch master cylinder function and leak	I	←	←	←
	Fluid level	I	←	←	←
	Oil clutch mechanism function and leak			I	←
Transmission	Leak	I	←	←	←
	Fluid level	I	←	←	←
	Gear function and abnormal noise	I	←	←	←
Differential	Leak	I	←	←	←
	Oil level	I	←	←	←
	Bolt loosening				T
Torque converter and transmission	Leak	I	←	←	←
	Fluid level	I	←	←	←
	Operating mechanism function and looseness	I	←	←	←
	Control valve and clutch functions	I	←	←	←
	Inching valve function	I	←	←	←
	Stall and hydraulic pressure measurement			M	←
Propeller shaft and axle shaft	Loose joint		T	←	←
	Looseness at spline connections				I
	Looseness of universal joint				I
	Twisting and cracks of axle shaft				I
DRIVE SYSTEM					
Wheels	Tire inflation pressure	M	←	←	←
	Tire cuts, damage and uneven wearing	I	←	←	←
	Loose rim and hub nuts	T	←	←	←
	Tire groove depth	M	←	←	←
	Metal chips, pebbles and other foreign matter trapped .in tire grooves	I	←	←	←
	Rim, side ring and disc wheel damage	I	←	←	←
	Abnormal sound and looseness of front wheel bearing	I	←	←	←

Item	Inspection Period	Every 1 month / Every 170 hours	Every 3 months / Every 500 hours	Every 6 months / Every 1000 hours	Every 12 months / Every 2000 hours
Wheel	Abnormal sound and looseness of rear wheel bearing	I	←	←	←
Front axle	Cracks, damage and deformation of housing				I
Rear axle	Cracks, damage and deformation of beam				I
	Looseness of axle beam in vehicle longitudinal direction				M
STEERING SYSTEM					
Steering wheel	Play and looseness	I	←	←	←
	Function	I	←	←	←
Gear box	Oil leak	I	←	←	←
	Looseness of mounting	T	←	←	←
	Clogging of relief valve filter			C	←
Rods, links and arm	Looseness and damage	I	←	←	←
	Linkage wear and mounting condi-tion				I
Power Steering	Oil leak	I	←	←	←
	Mounting and linkage looseness	I	←	←	←
	Damage of power steering hose				I
Knuckle	King pin looseness	I	←	←	←
	Cracks and deformation				I
Steering shaft	Wheel alignment				M
	Left and right turning angle				M
BRAKING SYSTEM					
Brake pedal	Play and reserve	M	←	←	←
	Braking effect	I	←	←	←
Parking brake	Operating force	I	←	←	←
	Braking effect	I	←	←	←
	Rod and cable looseness and damage	I	←	←	←
Brake pipe	Leak, damage and mounting condition	I	←	←	←
Reservoir tank	Leak and fluid level	I	←	←	←
Master cylinder and wheel cylinder	Function, wear, damage, leak and mounting looseness				I

Item	Inspection Period	Every 1 month Every 170 hours	Every 3 months Every 500 hours	Every 6 months Every 1000 hours	Every 12 months Every 2000 hours
Brake drum and brake shoe	Clearance between drum and lining	M	←	←	←
	Wear of shoe sliding portion and lining				I
	Drum wear and damage				I
	Shoe operating condition				I
	Anchor pin rusting				I
	Return spring fatigue				M
	Automatic adjuster function				I
Backing plate	Deformation, cracks and damage				I
	Loose mounting				T
MATERIAL HANDLING SYSTEM					
Forks	Abnormality of fork and stopper pin	I	←	←	←
	Misalignment between left and right fork fingers	I	←	←	+-
	Cracks at fork root and welded part				I*'
Mast and lift bracket	Deformation and damage of each part and crack at welded part	I	←	←	←
	Mast and lift bracket looseness	I	←	←	←
	Wear and damage of mast support bush				I
	Wear, damage and rotating condition of rollers	I	←	←	←
	Wear and damage of roller pins				I
	Wear and damage of mast strip	I	←	←	←
Chain and chain wheel	Tension, deformation and damage of chain	I	←	←	←
	Chain lubrication	I	←	←	←
	Abnormality of chain anchor bolt	I	←	←	←
	Wear, damage and rotating condition of chain wheel	I	←	←.	←
Various attachments	Abnormality and mounting condition of each part	I	←	←	←
HYDRAULIC SYSTEM					
Cylinder	Loosening and damage of cylinder mounting	I	←	←	←
	Deformation and damage of rod, rod screw and rod end	I	←	←	←
	Cylinder operation	I	←	←	←
	Natural drop and natural forward tilt (hydraulic drift)	M	←	←	←

Item	Inspection Period	Every 1 month Every 170 hours	Every 3 months Every 500 hours	Every 6 months Every 1000 hours	Every 12 months Every 2000 hours
Cylinder	Oil leak and damage	I	←	←	←
	Wear and damage of pin and cylinder bearing	I	←	←	←
	Lifting speed	M	←	←	←
	Uneven movement	I	←	←	←
Oil pump	Oil leak and abnormal sound	I	←	←	←
Hydraulic oil tank	Oil level and contamination	I	←	←	←
	Tank and oil strainer			C	←
	Oil leak	I	←	←	←
Control lever	Loose linkage	I	←	←	←
	Operation	I	←	←	←
Oil control valve	Oil leak	I	←	←	←
	Relief pressure measurement				M
	Relief valve and tilt lock valve functions	I	←	←	←
Hydraulic piping	Oil leak	I	←	←	←
	Deformation and damage	I	←	←	←
	Loose joint	T	←	←	←
ELECTRICAL SYSTEM					
Ignition timing	Cracks on distributor cap	I	←	←	←
	Spark plug burning and gap	I	←	←	←
	Distributor side terminal burning	I	←	←	←
	Distributor cap center piece wear and damage	I	←	←	←
	Plug cord internal discontinuity				I
	Ignition timing			M	←
Starting motor	Pinion gear meshing status	I	←	←	←
Charger	Charging function	I	←	←	←
Battery	Battery fluid level	I	←	←	←
	Battery fluid specific gravity			M	←
Electrical wiring	Damage of wiring harness	I	←	←	←
	Fuses	I	←	←	←

Item	Inspection Period	Every 1 month Every 170 hours	Every 3 months Every 500 hours	Every 6 months Every 1000 hours	Every 12 months Every 2000 hours
Preheater	Open-circuit in glow plug			I	←
	Open-circuit in intake heater			I	←
Engine stop-ping system	Diesel engine key stop device func-tion	I	←	←	←
SAFETY DEVICES, ETC.					
Head guard	Cracks at welded portion	I	←	←	←
	Deformation and damage	I	←	←	←
Back-rest	Loosening of mounting	T	←	←	←
	Deformation, crack and damage	I	←	←	←
Lighting system	Function and mounting condition	I	←	←	←
Horn	Function and mounting condition	I	←	←	←
Direction indicator	Function and mounting condition	I	←	←	←
Instruments	Functions	I	←	←	←
Backup buzzer	Function and mounting conditon	I	←	←	←
Rear-view mirror	Dirt, damage	I	←	←	←
	Rear reflection status	I	←	←	←
Seat	Loosening and damage of mounting	I	←	←	←
Body	Damage and cracks of frame, cross members, etc.				I
	Bolt looseness				T
Others	Grease up	L	←	←	←

PERIODIC REPLACEMENT OF PARTS AND LUBRICANTS

●: Replacement

Interval / Item	Every 1 month	Every 3 months	Every 6 months	Every 12 months
	Every 170 hours	Every 500 hours	Every 1000 hours	Every 2000 hours
Engine oil	●	←	←	←
Engine oil filter		●	←	←
Engine coolant (every 2 years for LLC)		●	←	←
Fuel filter			●	←
Torque converter oil			●	←
Torque converter oil filter			●	←
Transmission oil				●
Differential oil				●
Hydraulic oil			●	←
Hydraulic oil return filter	●*1		●	←
Wheel bearing grease				●
Spark plugs			●	←
Air cleaner element				●
Cups and seals for brake master and wheel cylinders				■
Brake fluid			●	←
Power steering hoses				●*2
Power steering rubbers parts				●*2
Hydraulic hoses				●*2
Brake fluid reservoir tank hose				●*2
Fuel hoses				●*2
Torque converter rubber hoses				●*2
Chains				●*3

*1: for new vehicle *2: Every 2 years *3: Every 3 years

Replacement shall be made upon arrival of the operation hours or months, whichever is earlier.

ENGINE

ENGINE SECTIONAL VIEWS

5K Engine

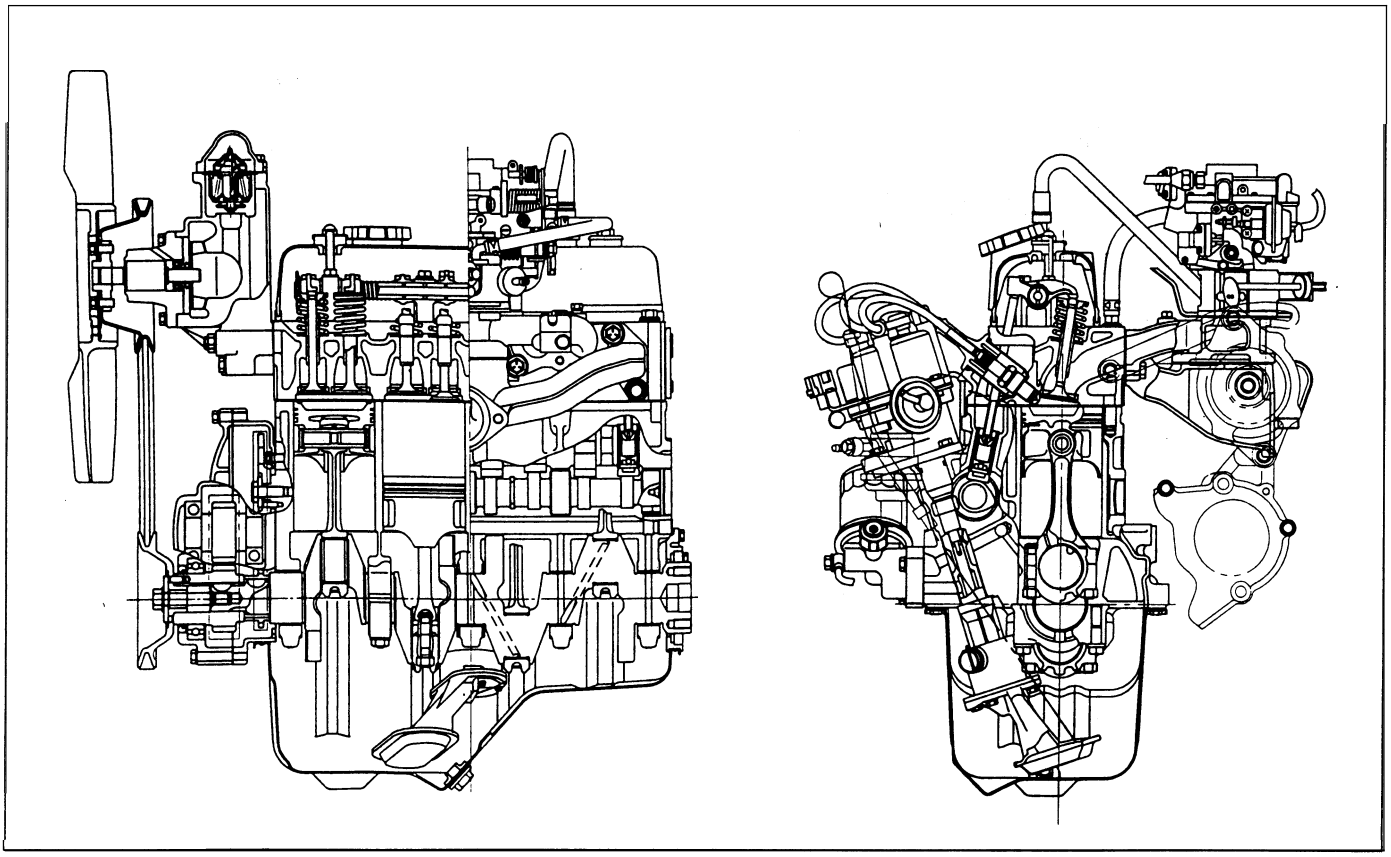

4Y Engine

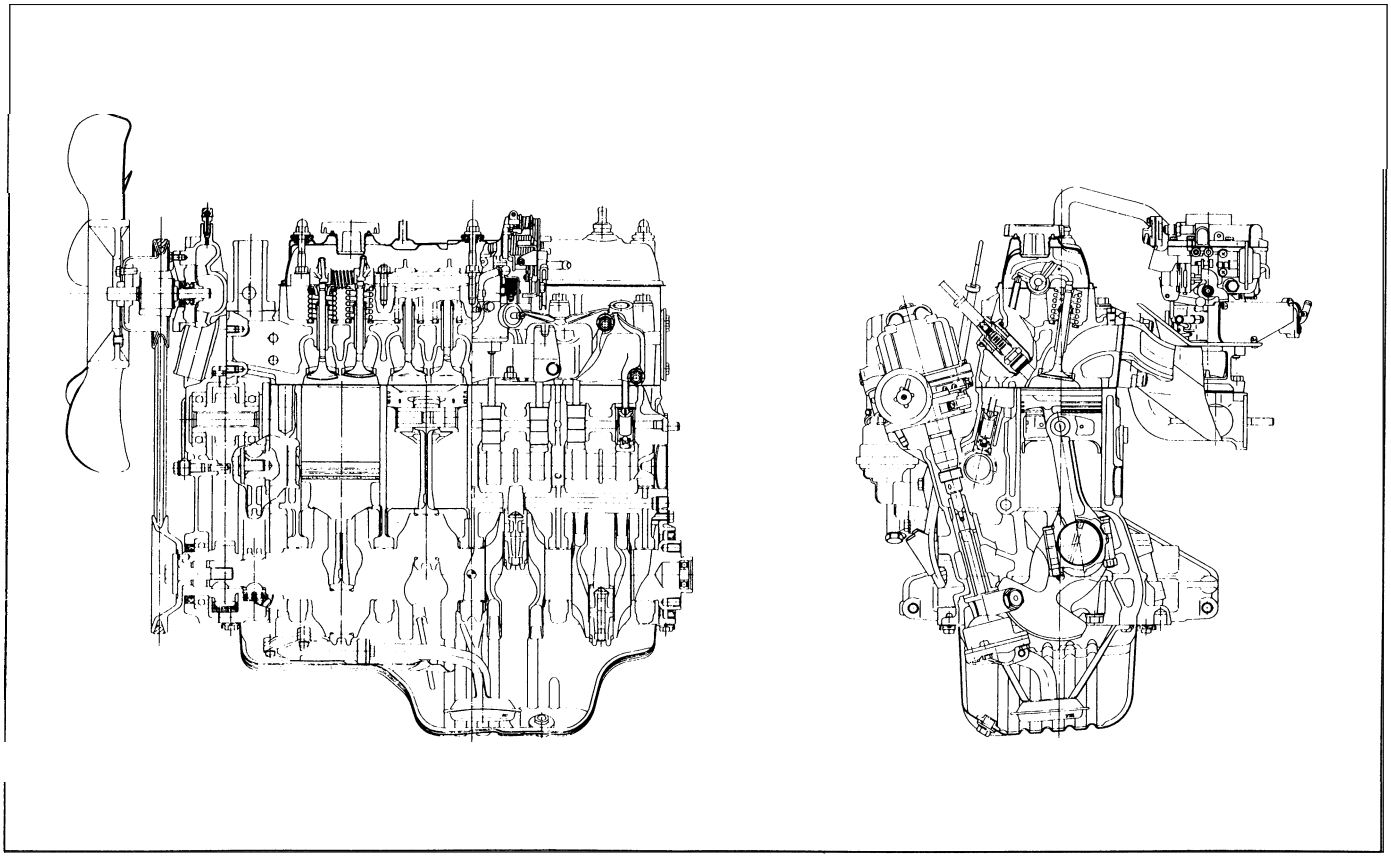

1DZ Engine

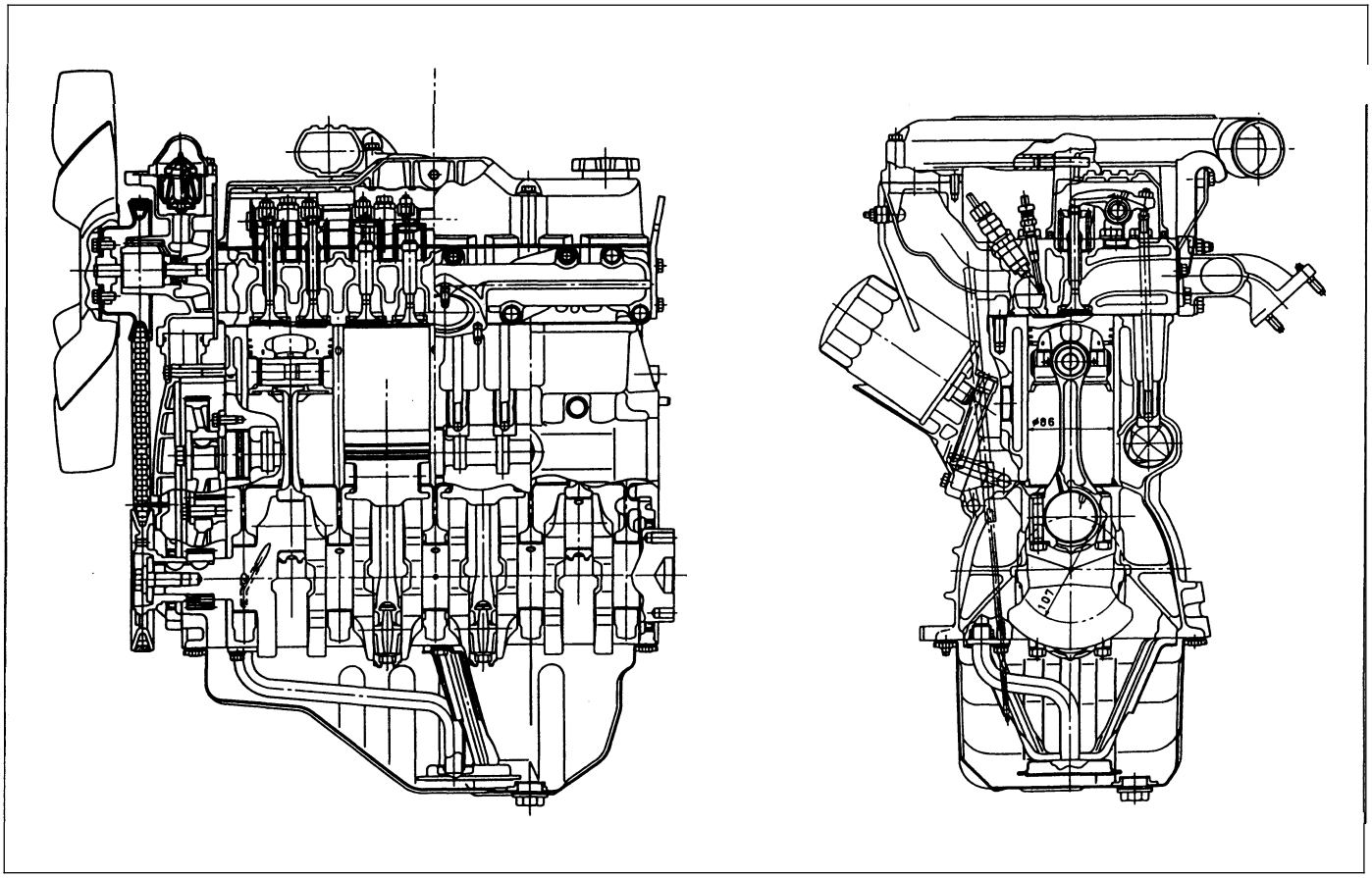

22 Engine

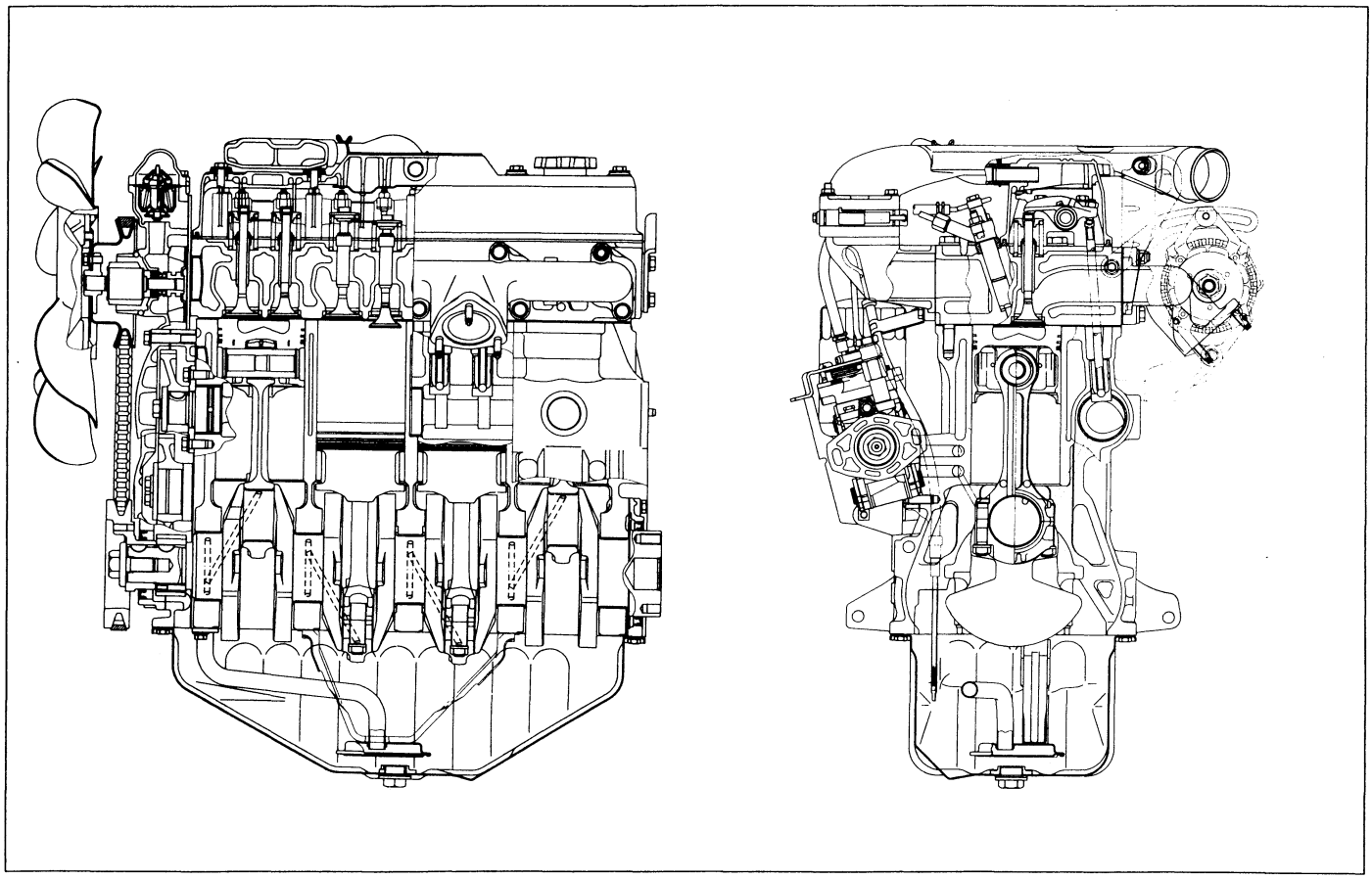

MAJOR SPECIFICATIONS

Gasoline Engines

Item \ Engine	5K	4Y (1.2 ton series)	4Y (3 ton series)
Engine type	Gasoline 4-cycle	←	←
Number of cylinders and arrangement	Inline 4 cylinders ·longitudinal	←	←
Combustion chamber type	Wedge type	←	←
Valve mechanism	OHV·chain-driven	←	←
Bore x stroke mm (in)	80.5 x 73.0 (3.169 x 2.874)	91.0 x 86.0 (3.583 x 3.386)	←
Total displacement cc (cu-in)	1486 (90.68)	2237 (136.51)	←
Compression ratio	9.3	8.8	←
Maximum power PS/rpm	3812800	5412400	5812600
Maximum torque kg-m/rpm	11.512000	16.511800	←
Minimum specific fuel consumption g/PS-h (rpm)	210 (2800)	200 (2300)	←
Service weight N (kg) [lb]	951 (97) [214]	1314 (134) [295]	←
No-load maximum rpm rpm	3050	2600	2800

Diesel Engines

Item \ Engine	1DZ (1 ton series)	1DZ (2·3 ton series)	22
Engine type	Diesel.4-cycle	←	←
Number of cylinders and arrangement	Inline 4 cylinders .longitudinal	←	←
Combustion chamber type	Whirl chamber type	←	Direct injection type
Valve mechanism	OHV·gear-driven	←	←
Bore x stroke mm (in)	86.0 x 107.0 (3.386 x 4.213)	←	98.0 x 115.0 (3.858 x 4.528)
Total displacement cc (cu-in)	2486 (151.71)	←	3469 (211.69)
Compression ratio	21.5	←	18.6
Maximum power PS/rpm	5512400	6012600	6612200
Maximum torque kg-m/rpm	17.011600	←	22.011600
Minimum specific fuel consumption g/PS-h (rpm)	185 (1400)	←	154 (1600)
Service weight N (kg) [lb]	1726 (176) [388]	←	2345 (240) [529]
No-load maximum rpm rpm	2600	2800	2400

ENGINE PERFORMANCE CURVES

5K Engine

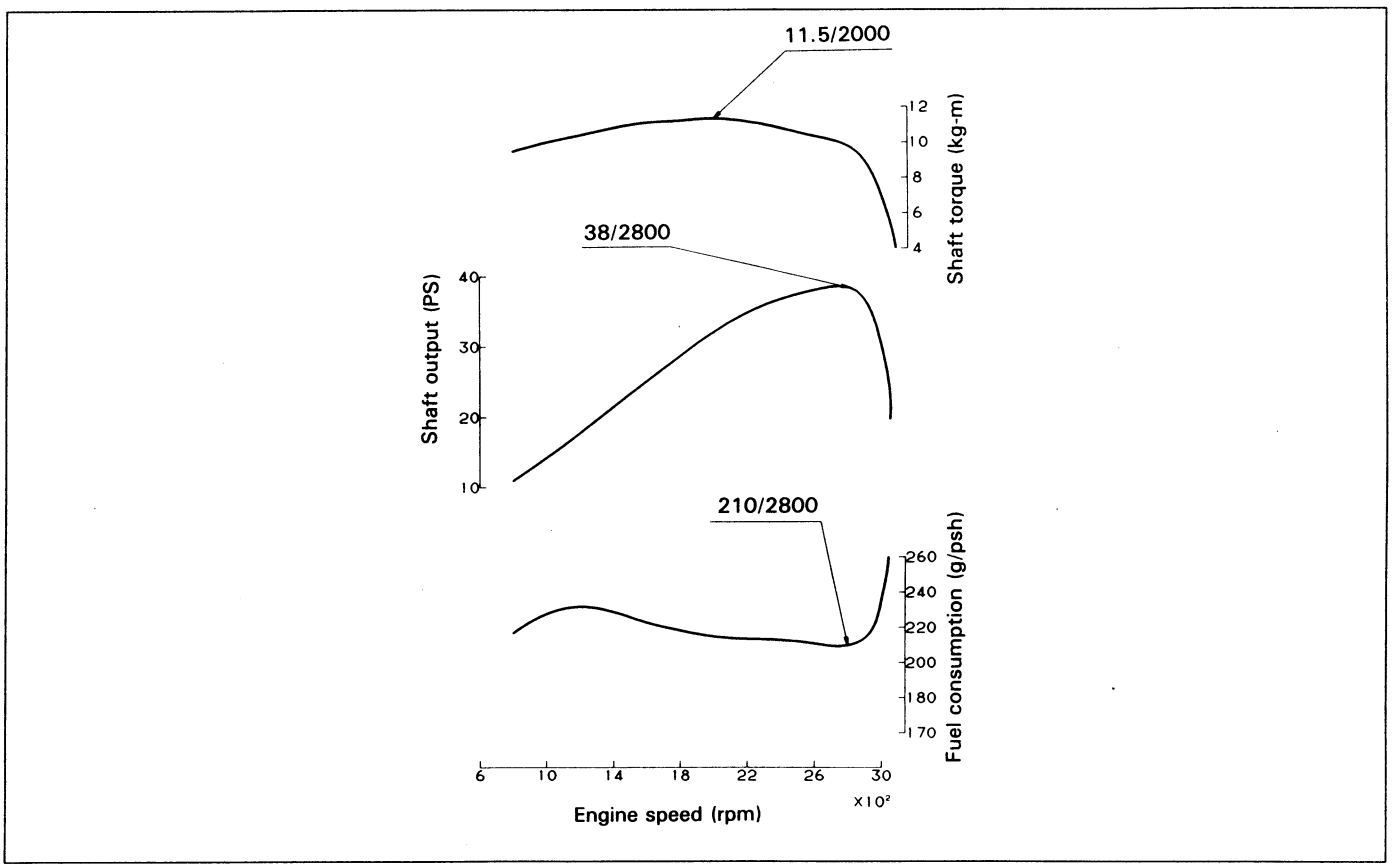

4Y Engine

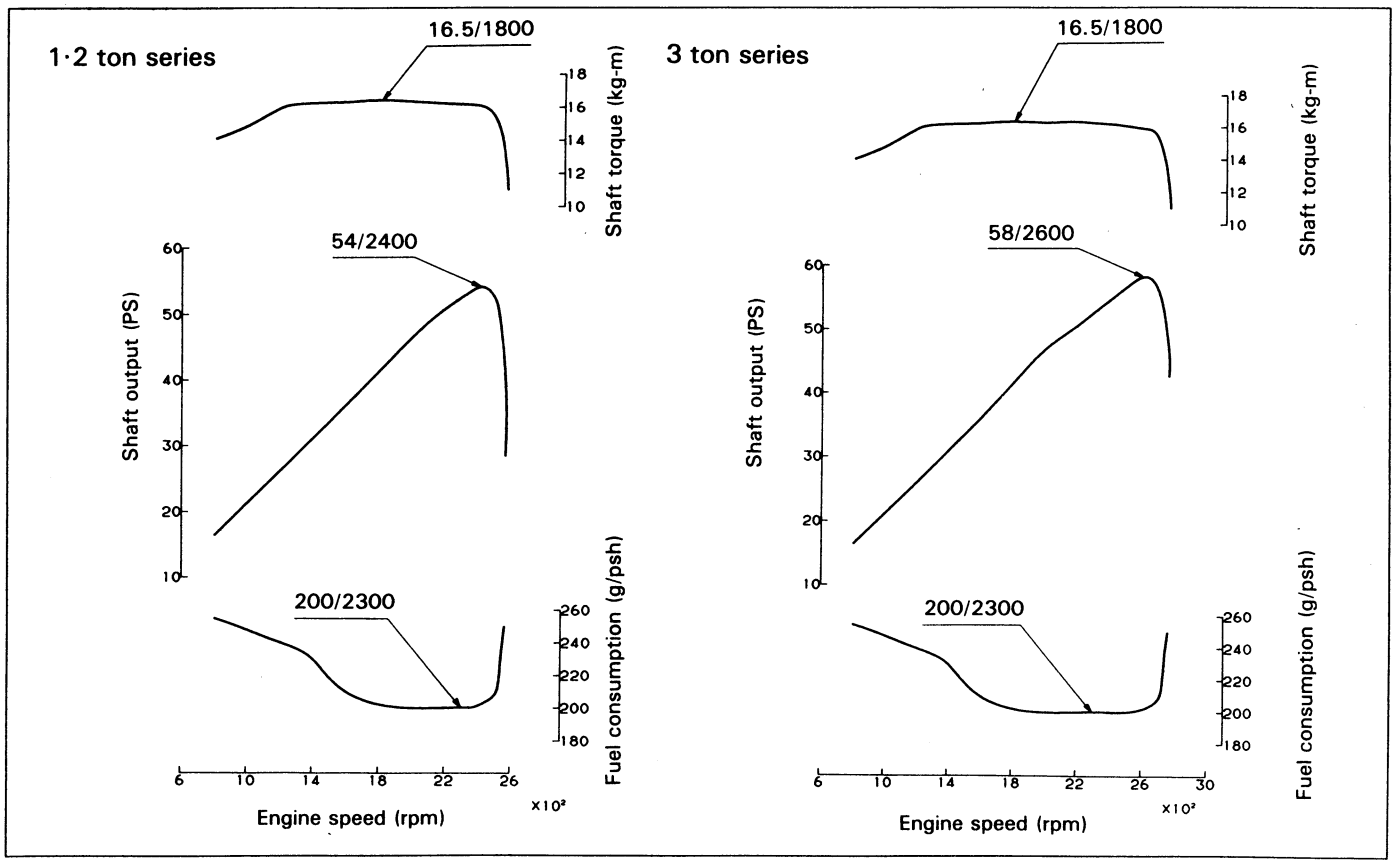

1

1DZ Engine

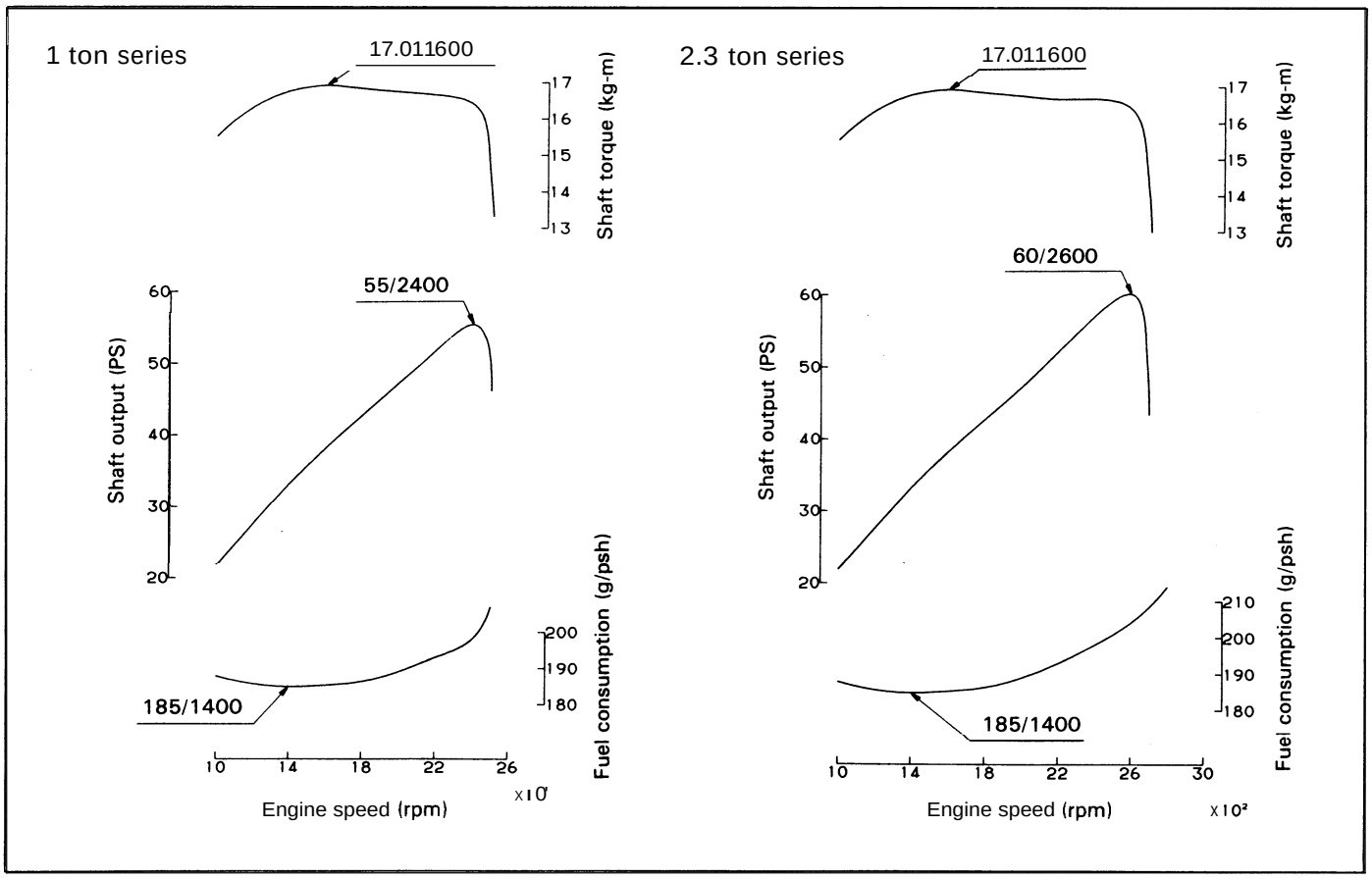

2Z Engine

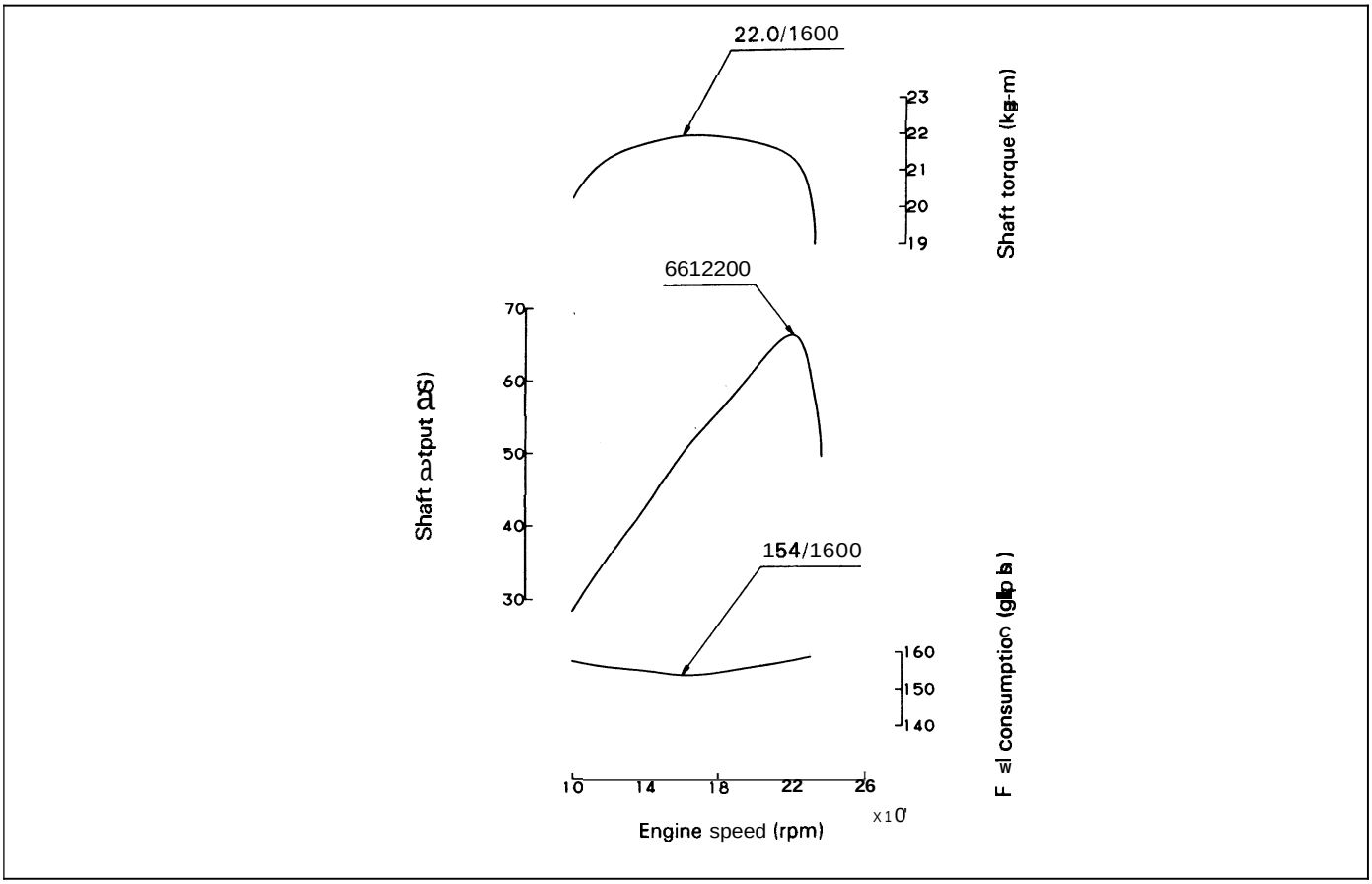

ENGINE ASSY

ENGINE W/TRANSMISSION REMOVAL·INSTALLATION

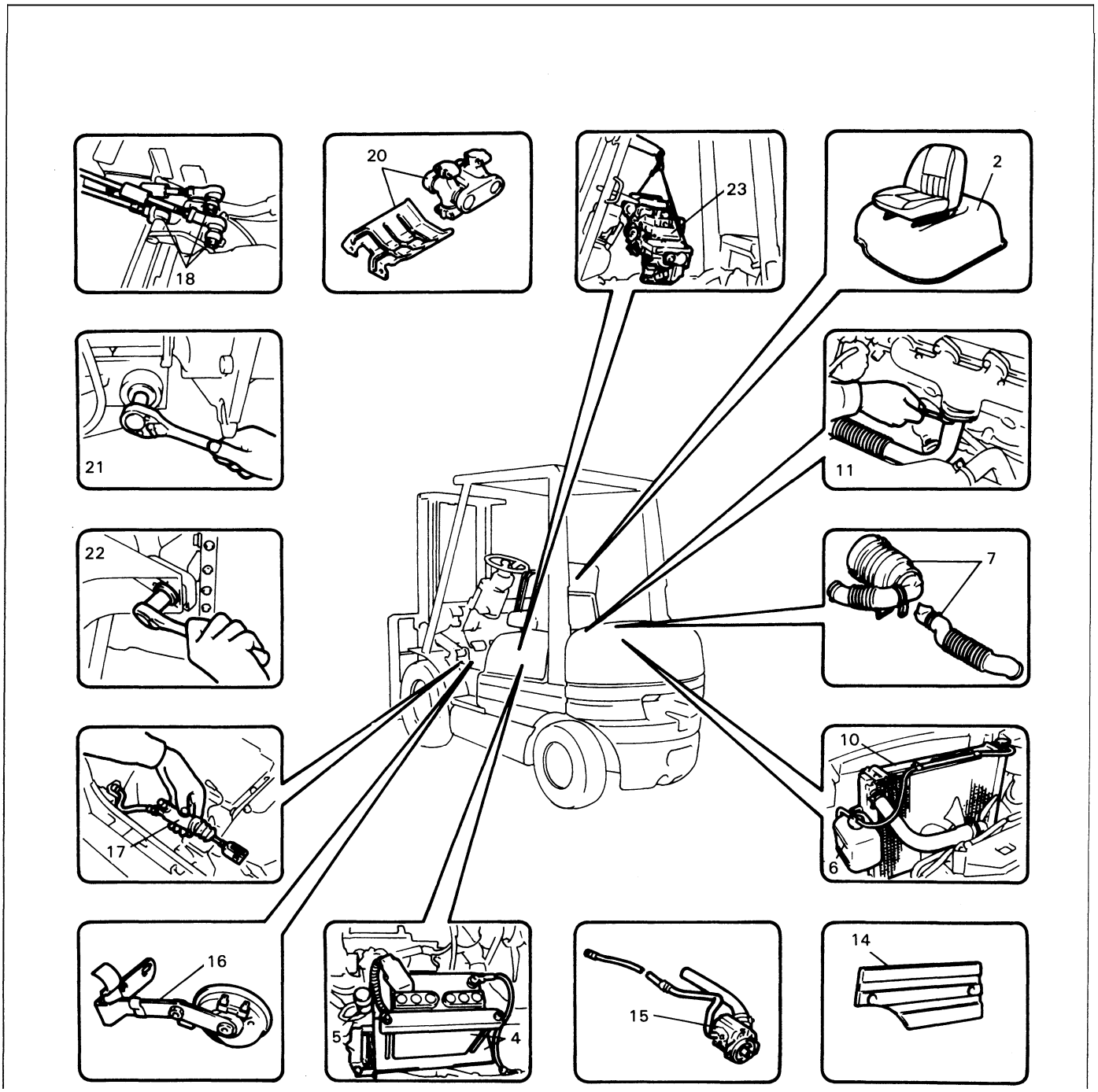

1 Radiator cover
3 Toe board
8 Under cover and tire cover
9 Coolant
12 Fuel hose
13 Accelerator wire
19 Electrical wiring

Removal Procedure

1 Remove the radiator cover.

2 Remove the engine hood.

3 Remove the toe board.

4 Remove the battery and battery case.

5 Disconnect the electrical parts wiring, and remove the bracket W/electrical parts.
(Keep the fuse box free by removing the set bolts.)

6 Remove the radiator reservoir tank.

7 Remove the air cleaner. [Point 1]

8 Remove the undercover and tire cover RH.
(Only 2Z engine models)

9 Drain the coolant.

10 Remove the radiator.

11 Disconnect the exhaust pipe.

12 Disconnect the fuel hose. [Point 2]

13 Disconnect the accelerator wire. (Disconnect on the carburetor side on gasoline engine models, or on the injection pump side on diesel engine models.)

14 Remove the frame side covers RH (rear and front).

15 Remove the oil pump W/pump hose.

16 Remove the horn.

17 Disconnect the clutch release cylinder from the clutch housing and keep it free.

18 Disconnect the gear shift lever link rod. [Point 3]

19 Disconnect electrical wiring.

20 Remove the propeller shaft cover and propeller shaft.

21 Remove the transmission mounting set bolts.

22 Remove the engine mounting set nuts.

23 Remove the engine W/transmission. [Point 4]

Installation Procedure

The installation procedure is the reverse of the removal procedure.

Note:
Bleed air from the fuel system after engine installation. (In diesel engine models only)

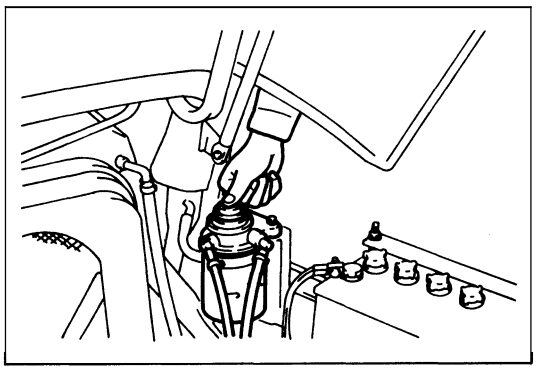

Bleeding Air from Fuel System (Diesel Engine Models)

1DZ·2Z engine

1. Operate the fuel filter hand pump until the pump operation becomes heavy to indicate the end of air bleeding.

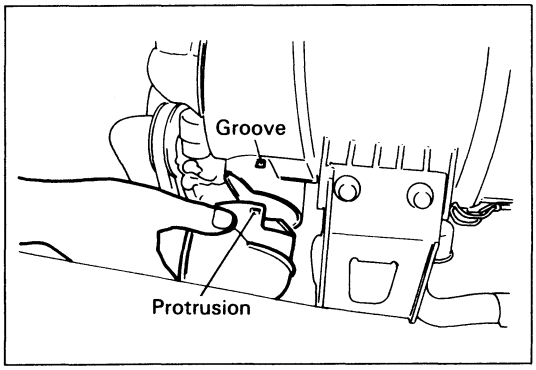

Point Operations

[Point 1]

Removal·Installation: Remove the air cleaner inlet side connector as follows.

1. Disconnect the connector on the air cleaner case side.
   (1) Hold the connector elbow portion with a hand, and pull downward until the connector side protrusion comes off from the groove on the case side.

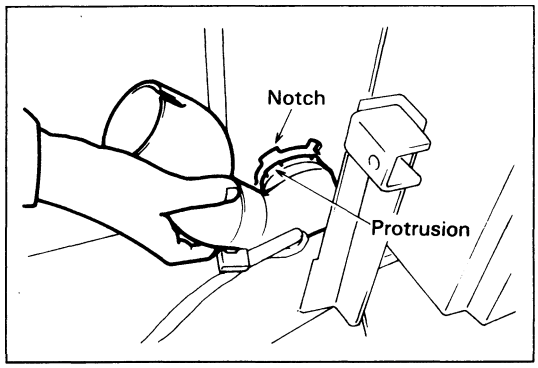

2. Disconnect the head guard pillar side connector.
   (1) Rotate the connector upward as illustrated and disconnect at the position where the pillar side notch aligns with the connector flange protruded portion.

3. Reverse the removal procedure for installation.

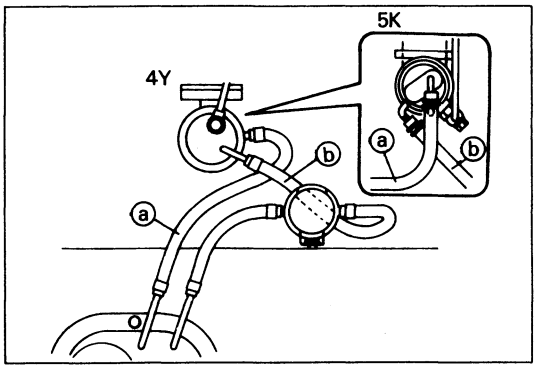

[Point 2]

Installation: Do not mistake the fuel hose connecting position. (Gasoline engine models)

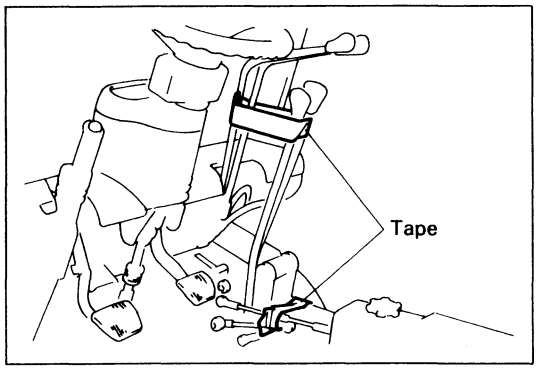

[Point 3]

Removal: Wrap each of the disconnected rod and the freed shift lever with tape for holding in place.

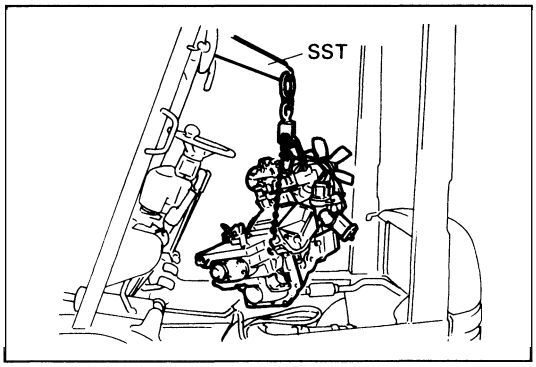

[Point 41

Removal·Installation: SST 09010-20111-71
In the case of the 5K engine, use the SST above and a sling device (SST 09090-04010) for more efficient operation.

Removal: Remove after checking thorough disconnection of wiring, hose and cables.

Thank you very much for your reading.

Please Click Here Then Get More Information.